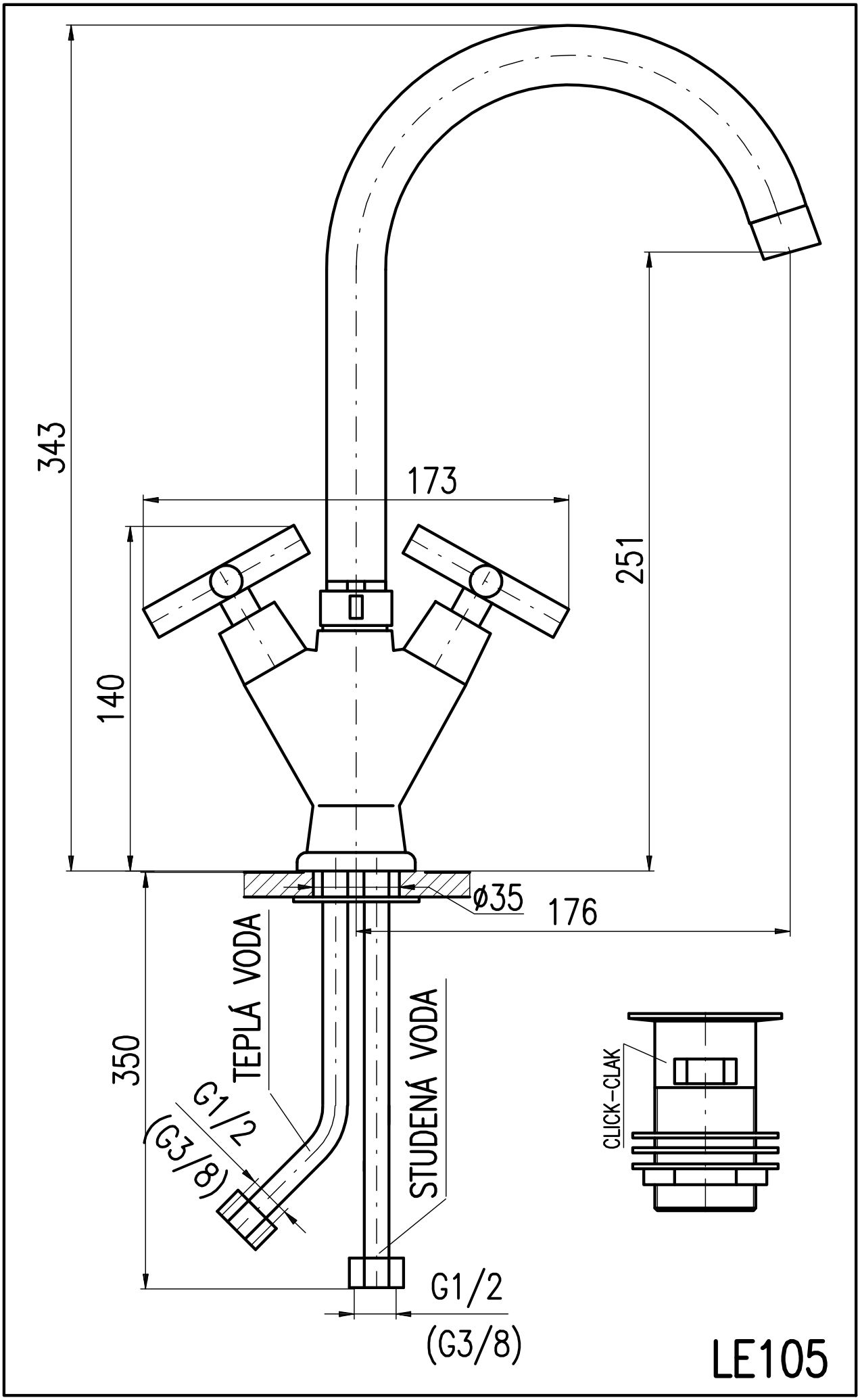
343
173
251
140
ø35
176
350
TEPLÁ VODA
G1/2
(G3/8)
STUDENÁ VODA
G1/2
(G3/8)
CLICK-CLAK
LE105