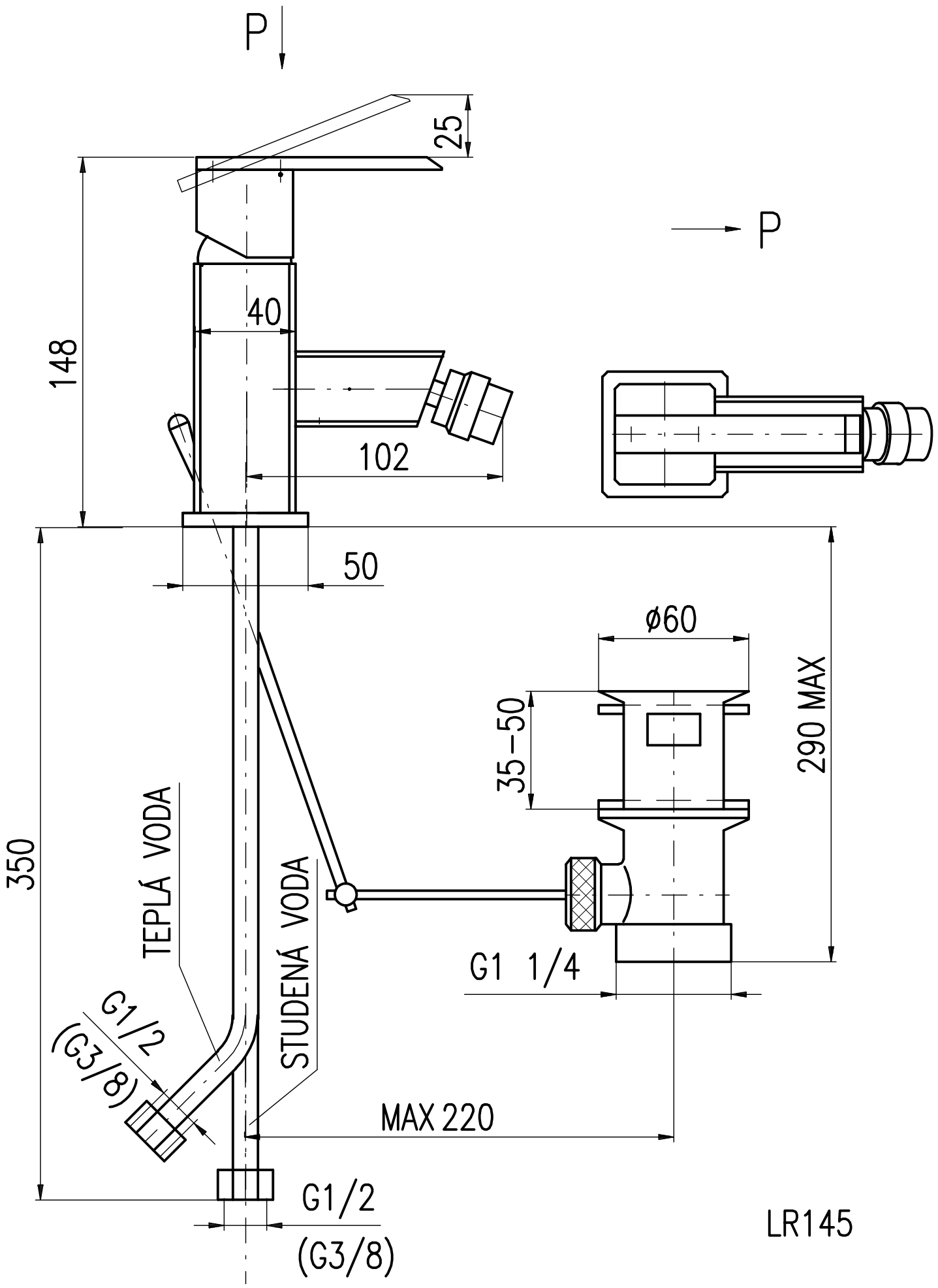
P
25
P
40
148
102
50
ø60
290 MAX
35–50
350
TEPLÁ VODA
STUDENÁ VODA
G1 1/4
G1/2
(G3/8)
MAX 220
G1/2
(G3/8)
LR145