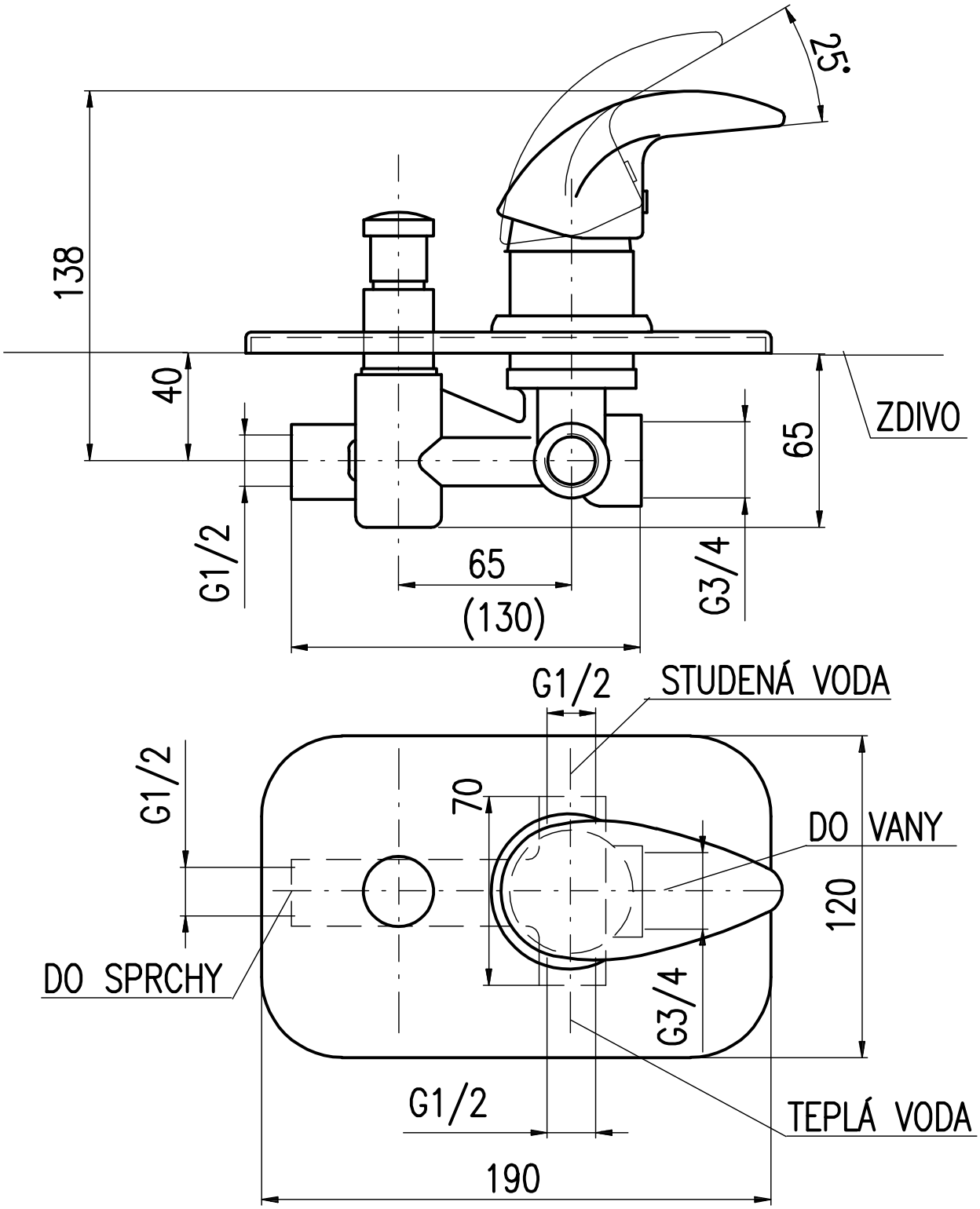
25°
138
40
ZDIVO
65
G1/2
65
(130)
G3/4
G1/2
STUDENÁ VODA
G1/2
70
DO VANY
120
DO SPRCHY
G3/4
G1/2
TEPLÁ VODA
190

V186